Diritti riservati All rights reserved

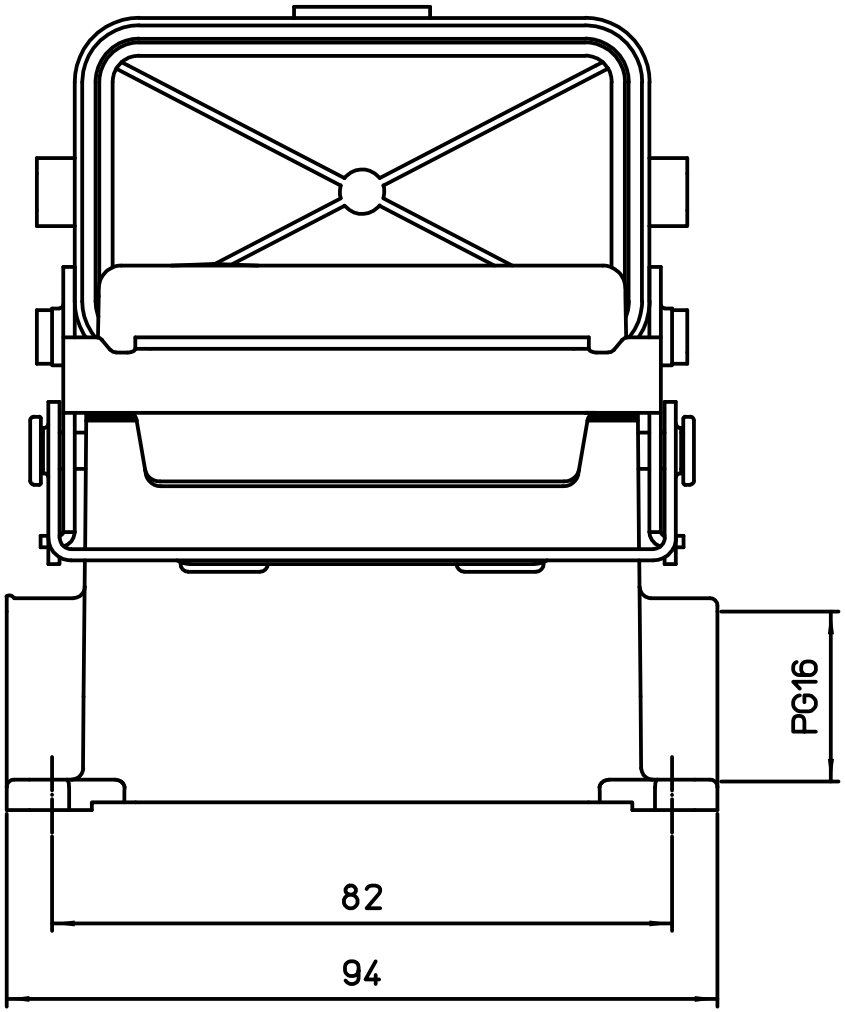

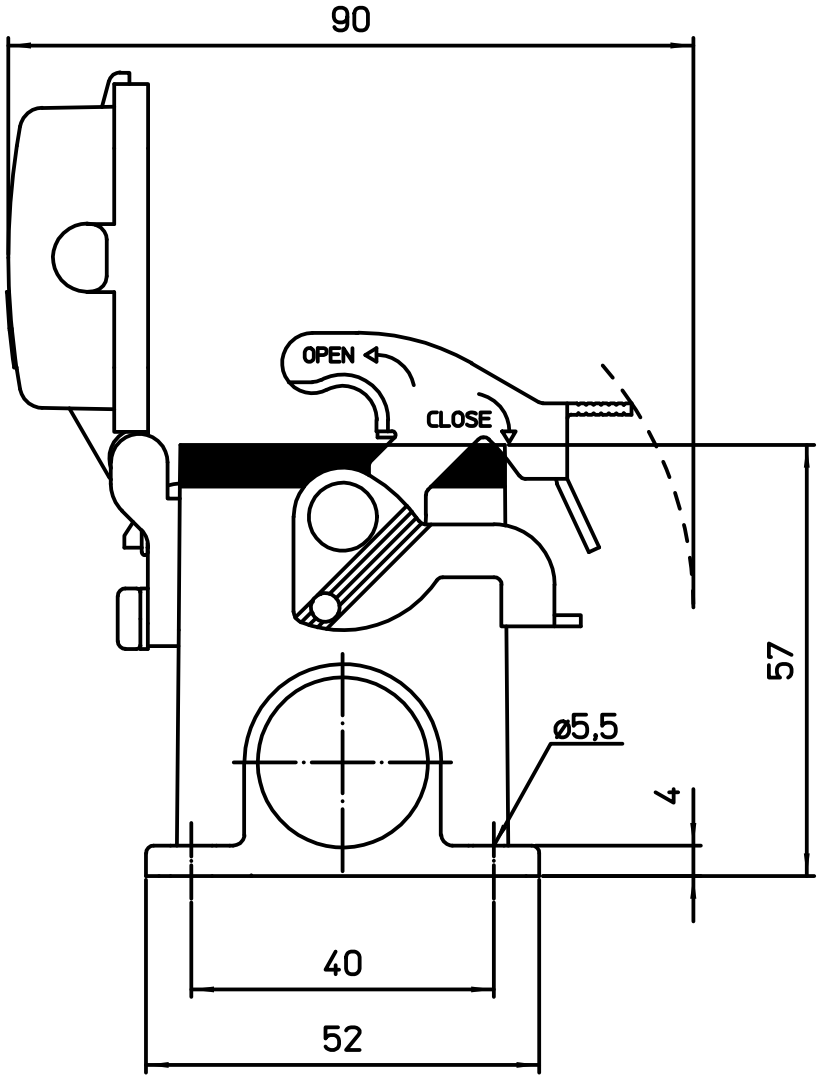

dimensions in mm	
Date	22/03/19
Sign.	Pitasi

CVP 10 LSP16

Surface mounting housings with 1L and cover, PG16 - SIMPLEX

Scale 1:1